PK-72 *EXPEDITER* ASSEMBLY INSTRUCTIONS

PARTS LIST

Launch Lug LL-25 or LL-50
Shock Cord Mount
Nylon Elastic Shock Cord
Nylon Parachute LP-36
3 Plywood Fin
Added Coupler for shipping.
Nose Cone PNC-3.00
Slotted Airframe SBT-3.90-34"-3S
Motor Mount Tube MMT-2.14
2 Centering Rings CR-3.90-2.14
Payload-14"
Airframe Reducer AR-3.90-3.00

- ◊ Due to the high thrust motors that can be flown in this kit, it is strongly recommended that epoxy be used throughout its entire construction.
- ◊ Before beginning construction, read over assembly instructions to become familiar with the proper construction sequence. Check rear and side exposed views (shown at bottom of instructions) carefully for fin positions and motor mount/centering ring placement inside the main airframe.
- ◊ TEST FIT PARTS BEFORE BONDING TOGETHER WITH GLUE!!!!
- ◊ To reduce shipping damage, a tube coupler has been inserted into the slotted end of the main airframe. Remove the tube coupler and discard or keep for future projects.
  It may be necessary to lightly sand some parts to obtain a proper fit.
- ◊ The following items will be needed for the construction & finishing of this kit: 12" ruler, Modeling knife, Pen or pencil, Masking tape, Sanding sealer, Paint brushes (assorted sizes), Sandpaper (medium & fine), Primer and paint, Yellow Carpenter's Glue or Epoxy (5 or 15 minute).

Main Airframe Assembly Instructions

1. Using fine sandpaper, sand the outside of the main airframe, motor mount tube, and launch lug for better epoxy adhesion.
2. Position a wooden centering ring onto each end of the 54mm motor mount tube so that the motor mount tube protrudes 1/8" beyond the centering ring and glue in place. Give both sides of the two centering ring/motor mount tube joints a good fillet coat of epoxy to insure maximum strength.
3. Apply a continuous bead of epoxy around the inside of the pre-slotted airframe 11" up from its slotted end. Take the assembled motor mount and push it straight up into the epoxied end of the airframe until the bottom end of the motor mount tube is flush with the airframe's bottom edge. Set in upright position to dry. When dry, turn assembly upside down and give exposed bottom centering ring a light layer of epoxy for additional strength. Set aside to dry.
4. Sand all fins smooth and round off the leading and trailing edges of them using medium, then fine sandpaper.
5. Test fit the fin tabs (which protrude out from the fin's root edge) into the airframe's fin slots. Sand the tab edge that will mate to the motor mount tube if necessary to obtain a good flush fit.
6. Once all parts fit to your liking, apply a liberal amount of epoxy to the fin tab area and along the edge mating with the airframe and position fin perpendicular to the airframe – set aside to cure. Keep the airframe in a horizontal position while the epoxy sets up. Make sure that the fin is straight up from the airframe tube and against the slot's bottom edge. Repeat with each of the remaining fins.
7. Sight in the high point (center of the airframe's diameter) of the airframe between any 2 fins and from 8" up from the airframe's aft end, make a small pencil mark. From this mark, make a straight line up about 6" long. Cut the launch lug at an angle to reduce drag. Epoxy the launch lug directly on this line, making sure that it is parallel to the airframe. Set aside to cure in the horizontal position.
8. Give all fin and launch lug joints ADDED epoxy fillets for MAXIMUM strength.
9. Install the shock cord mount as detailed below.

Shock Cord Mount Instructions

LOC/PRECISION'S Shock Cord Mount is easy to make and install, yet is very strong! This mounting system makes shock cord attachment quick and easy.
Follow instructions carefully!

1. Take the length of nylon braided cord and at its center make a 1" long loop knot and pull it tight. Make a knot a 1/4" away from the end of EACH of the two loose ends.
2. Cut a piece of masking tape 1/4" wide by 1 1/4" long. This is centered crosswise just ahead of the two knots.

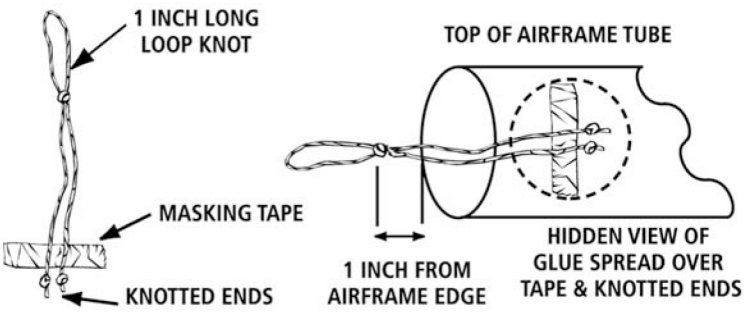

3. Carefully place the two knotted loose ends of the Shock Cord Mount, with tape attached, inside the top of airframe tube so that the 1" long loop knot is protruding out about 1" from the airframe tube's edge. Using a small piece of wooden dowel, press the masking tape down firmly around the inside of the airframe tubing. The masking tape will keep the Shock Cord Mount in place while gluing.
4. Place a generous bead of epoxy over the knotted ends and length of masking tape. Spread the epoxy around until they are completely covered and place the airframe in a horizontal position to dry.
   REPEAT STEP 4 UNTIL A SMOOTH EPOXY LAYER IS ACHIEVED OVER THE MASKING TAPE AND KNOTTED ENDS.

Payload Assembly Instructions

1. Glue or mechanically fasten with tape and/or screws (not provided) the "upper" smaller portion of the grey airframe reducer into the payload section as shown.
2. Secure Nosecone to Payload section with masking tape for a tight friction fit. (Note: as an alternate, small screws can also be used here if desired, not included with kit).
3. Attach Shock cord to the molded eyebolt in the completed payload section and to the Shock Cord Mount located in the main airframe.
4. This payload section will effectively become your nosecone.

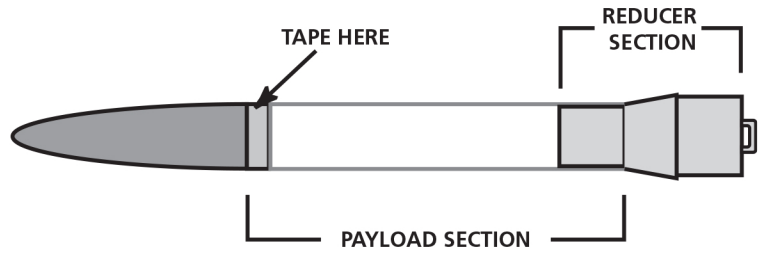

Main Airframe Assembly Instructions, Continued

10. Seal fins and launch lug with sanding sealer using a brush. Sand lightly between coats to fill pores and obtain a smooth finish. Lightly sand plastic nose cone with fine sandpaper to remove molding seam line. At this time, remove any plastic flash that was molded into the nose cone eyelet. This is necessary for shock cord attachment.
11. When you are satisfied with the smooth sanded finish of your model, it is ready to prime and then paint in the color or colors of your choice.
12. When the paint is completely dry, take one end of the shock cord and pass it through the loop of the shock cord mount. Secure it with a double knot. Take the other end of the shock cord and pass it through the eyelet of the plastic airframe reducer and also secure it with a double knot. Place a SMALL drop of epoxy on both knots to keep them permanently secured.
13. Attach the parachute to the shock cord at a point about 3' from the airframe reducer. To do this, take the chute shroud line loops in one hand and, with the other hand, take the chute and go around the shock cord, passing the chute through the shroud line loops. When the chute is pulled through tightly it will form a knot.
14. Select a motor for first flight. When using 29mm motors or 38mm motors, it is necessary to use LOC's motor mount adapter MMA-3, for 29mm motors and MMA-4 for 38mm motors, (not included in kit). Because of all the different motor combinations available (with varying motor lengths), this kit uses no motor blocks. Instead, wrap 1/2" wide masking tape around the nozzle end of each motor to a diameter equal to that of the motor mount tube. This will keep the motor from pushing forward upon ignition. Friction fit the motor in place by wrapping masking tape around the motor in two places for a snug fit in the motor mount tube. This will prevent the motor from ejecting rearward upon activation of the ejection charge.
15. Remember to use enough recovery wadding to protect the chute and shock cord from the hot ejection gases.
16. Always follow motor manufacturer's instructions for motor use and ignition, and launch this vehicle on calm, windless days to insure safe recovery.

CROSS SECTION OF CENTERING RINGS/ MOTOR MOUNT TUBE ASSEMBLY IN MAIN AIRFRAME.

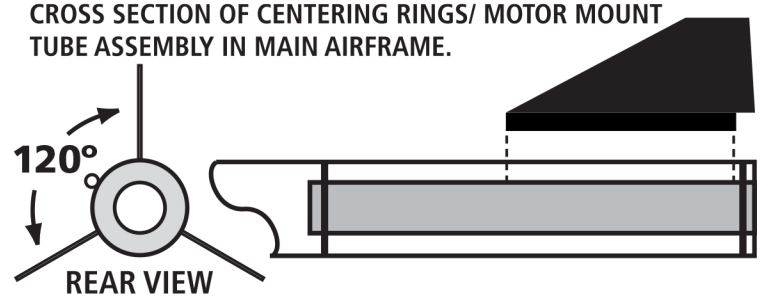

©2006 ROCKETS BY MELISSA, INC. dba LOC/PRECISION - ALL RIGHTS RESERVED